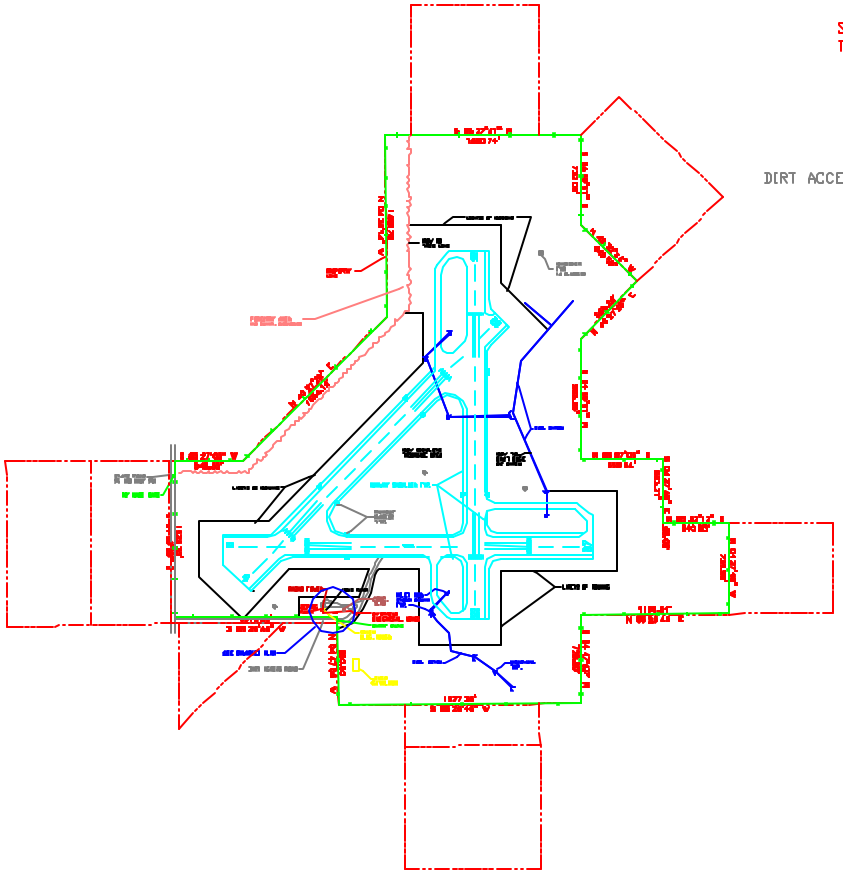

OLF WOLF

SCALE: 1" = 400'

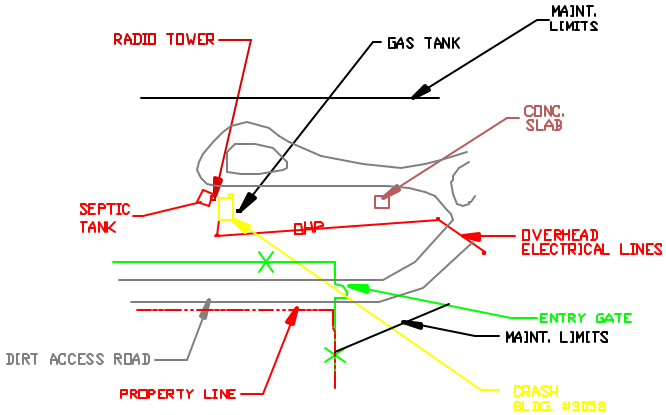

ENLARGED PLAN

SCALE: 1" = 30'

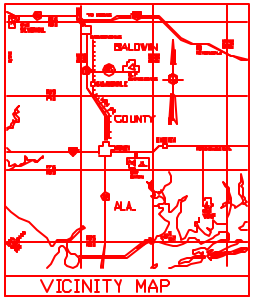

VICINITY MAP

LEGEND

- DIRECTION OF STORM WATER FLOW
- BENCH MARK
- R.C.P. REINFORCED CONCRETE PIPE
- 130 CONTOUR
- STORM WATER INLET
- OHS OVERHEAD SECONDARY
- OHP OVERHEAD PRIMARY
- US UNDERGROUND SECONDARY
- SS SANITARY SEWER LINE
- T TELEPHONE LINE
- W WATER LINE
- CHECK DAM
- OMNIDIRECTIONAL LIGHT
- ELEVATED LIGHT
- FENCE
- RAILROAD
- HEADWALL
- WIND SOCK
- G GAS LINE
- RUNWAY MARKER
- DATCH BASIN
- PROPERTY/BOUNDARY LINE

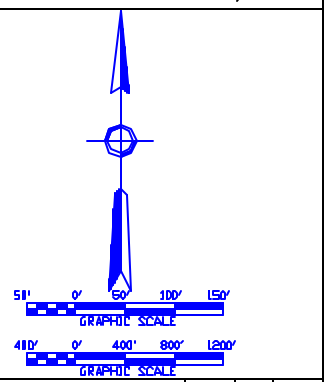

NOTE: 1. U4 ACRES INCLUDED IN AGRICULTURE OUTLEASE.

DATA OBTAINED FROM

NAVFAC DWG. #5032046
NAVFAC DWG. #5032455
NAVFAC DWG. #5032456
NAVFAC DWG. #5016289
P.V. DWG. #3191

NO.	REVISION DESCRIPTION	PREP'D BY	DATE	APPROVED

DEPARTMENT OF THE NAVY — NAVAL FACILITIES ENGINEERING COMMAND

WHITING FIELD
NAVAL AIR STATION
MILTON FLORIDA

GENERAL DEVELOPMENT MAP, EXISTING CONDITION
OLF WOLF

SIZE F — CODE IDENT NO. 80091 — DRAWING NO. 5216411

CAD FOR COMPUTER DRAWING